Project Casper

Flight Readiness Review

(FRR) Appendix

Purdue University 2020

500 Allison Road
West Lafayette, IN 47906

Purdue Space Program

Table of Contents

1. Appendix A

1.1. Additional Dimensional Drawings - Payload System

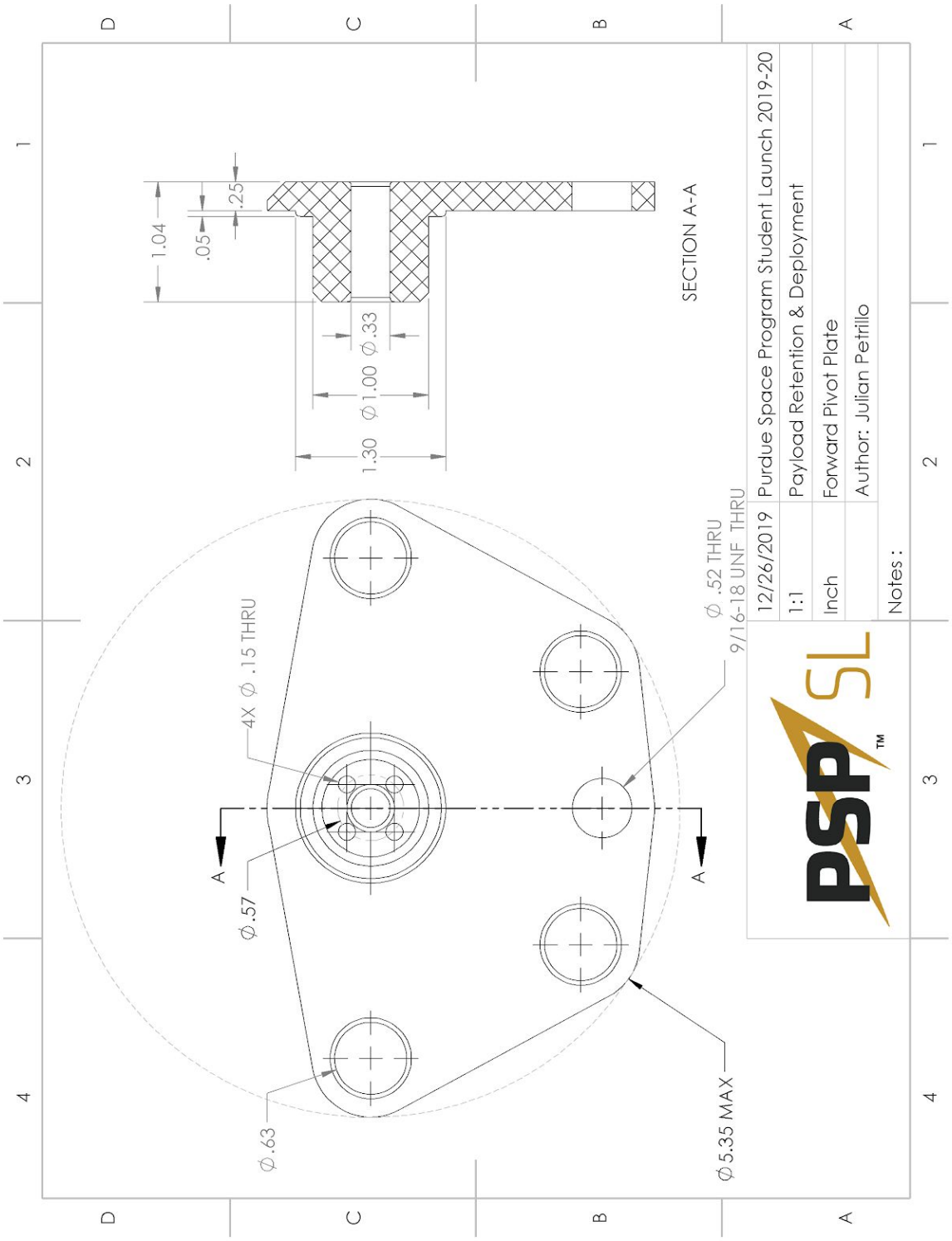

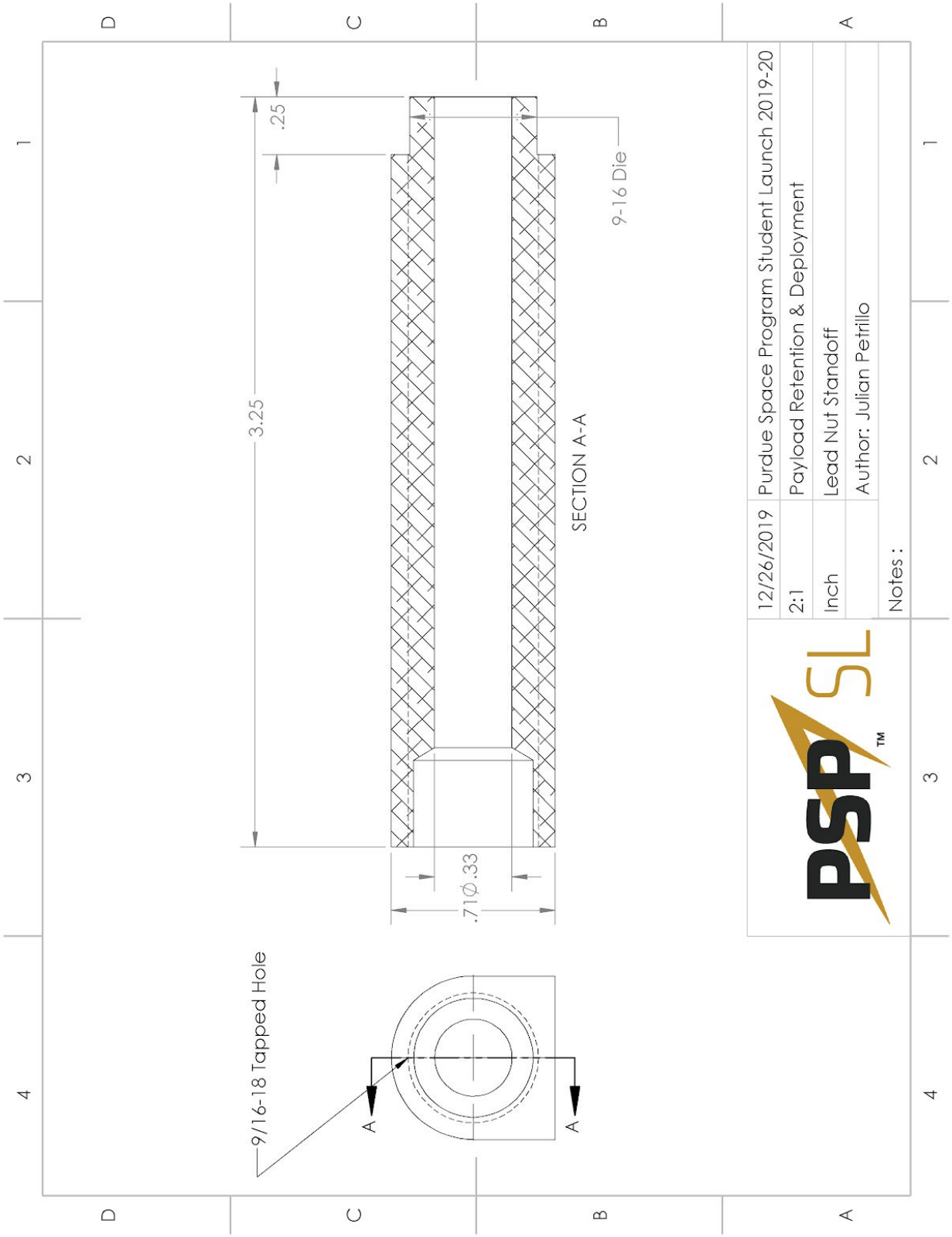
.25
3.25
9-16 Die
SECTION A-A
.71Ø.33
9/16-18 Tapped Hole
A
A
12/26/2019
Purdue Space Program Student Launch 2019-20
2:1
Payload Retention & Deployment
Inch
Lead Nut Standoff
Author: Julian Petrillo
Notes :

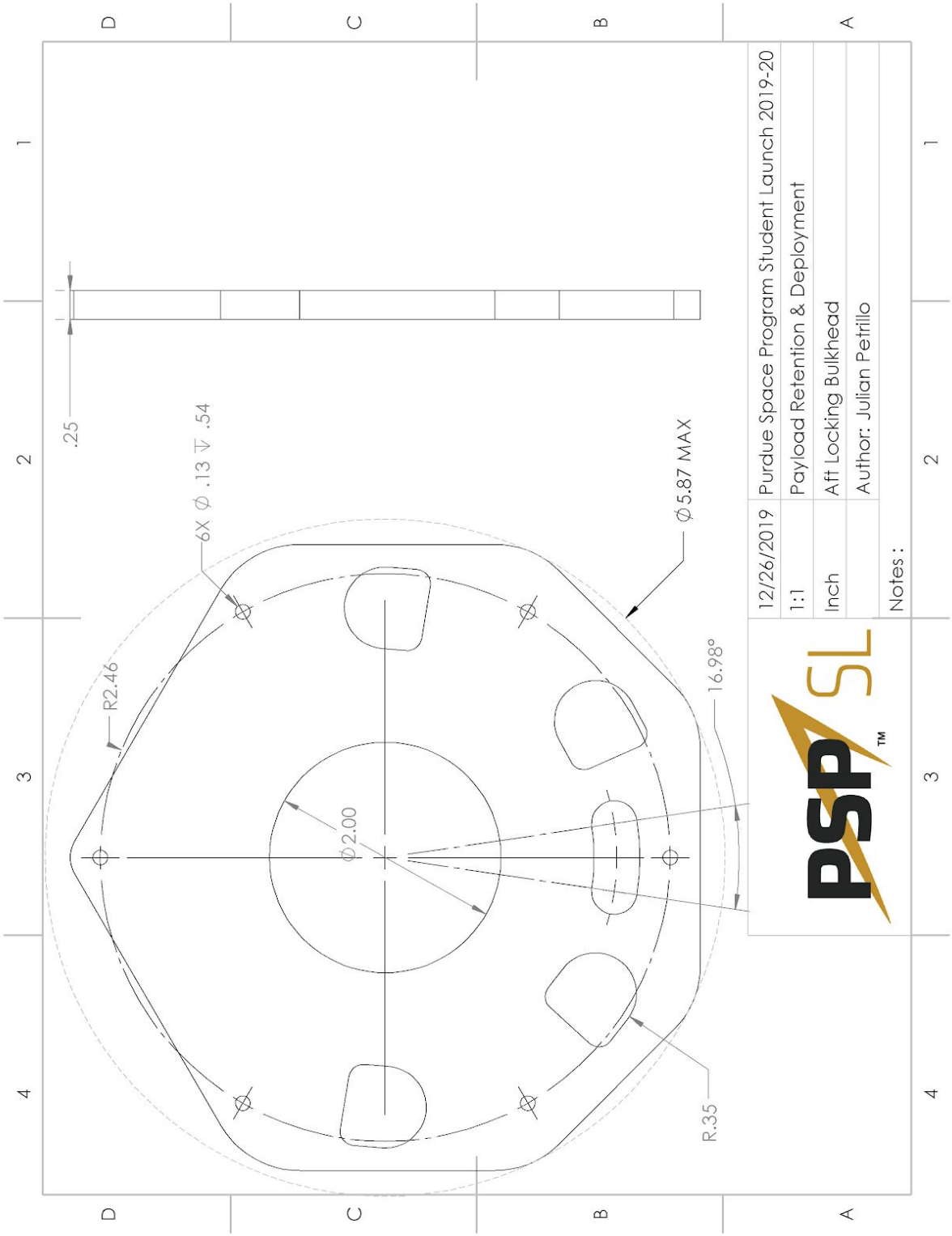
.25
6X ⌀ .13 ↧ .54
R2.46
⌀2.00
⌀5.87 MAX
16.98°
R.35
12/26/2019
Purdue Space Program Student Launch 2019-20
1:1
Payload Retention & Deployment
Inch
Aft Locking Bulkhead
Author: Julian Petrillo
Notes :

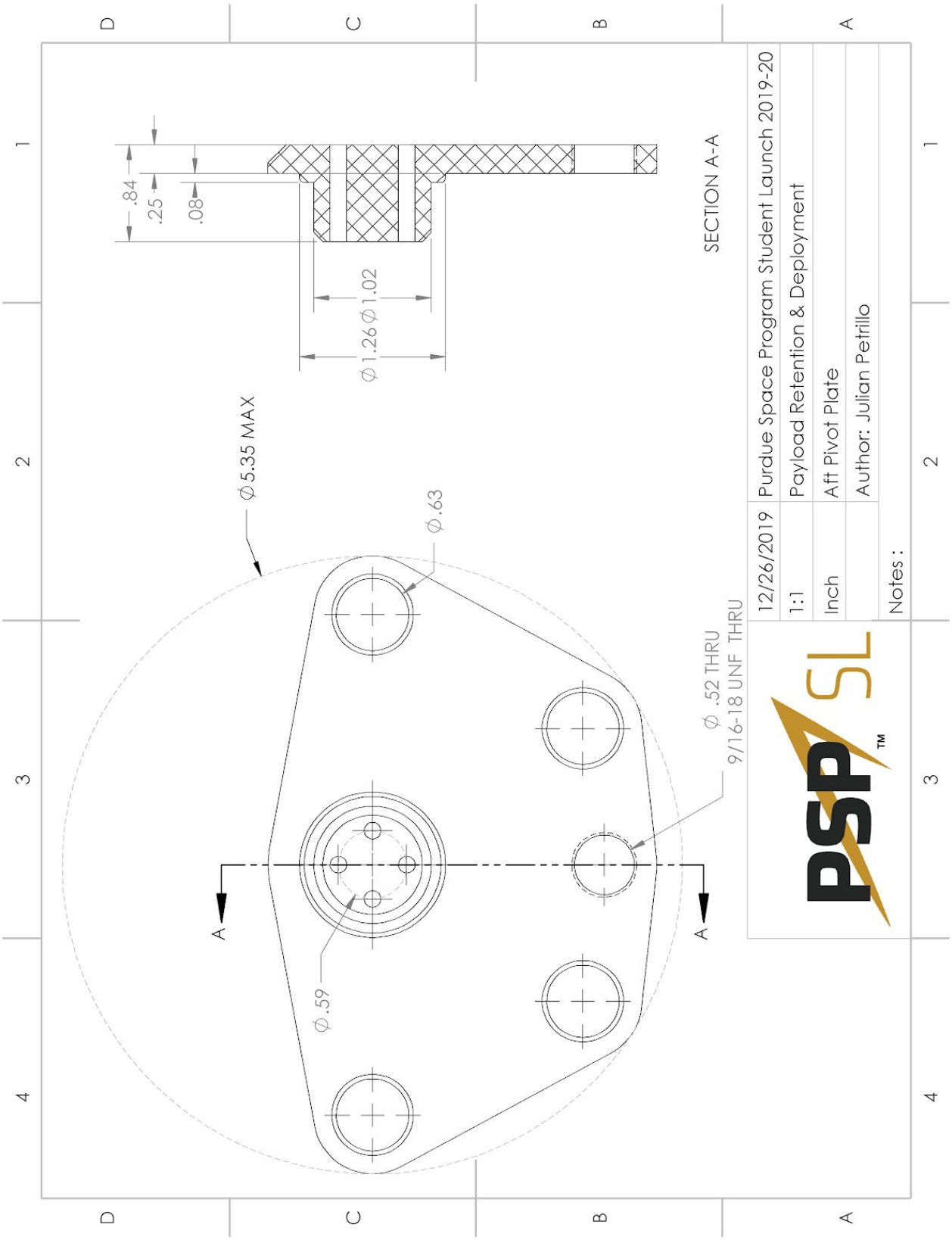
.84
.25
.08
Ø1.26 Ø1.02
SECTION A-A
Ø5.35 MAX
Ø.63
Ø .52 THRU
9/16-18 UNF THRU
Ø.59
A
A
12/26/2019
Purdue Space Program Student Launch 2019-20
1:1
Payload Retention & Deployment
Inch
Aft Pivot Plate
Author: Julian Petrillo
Notes :

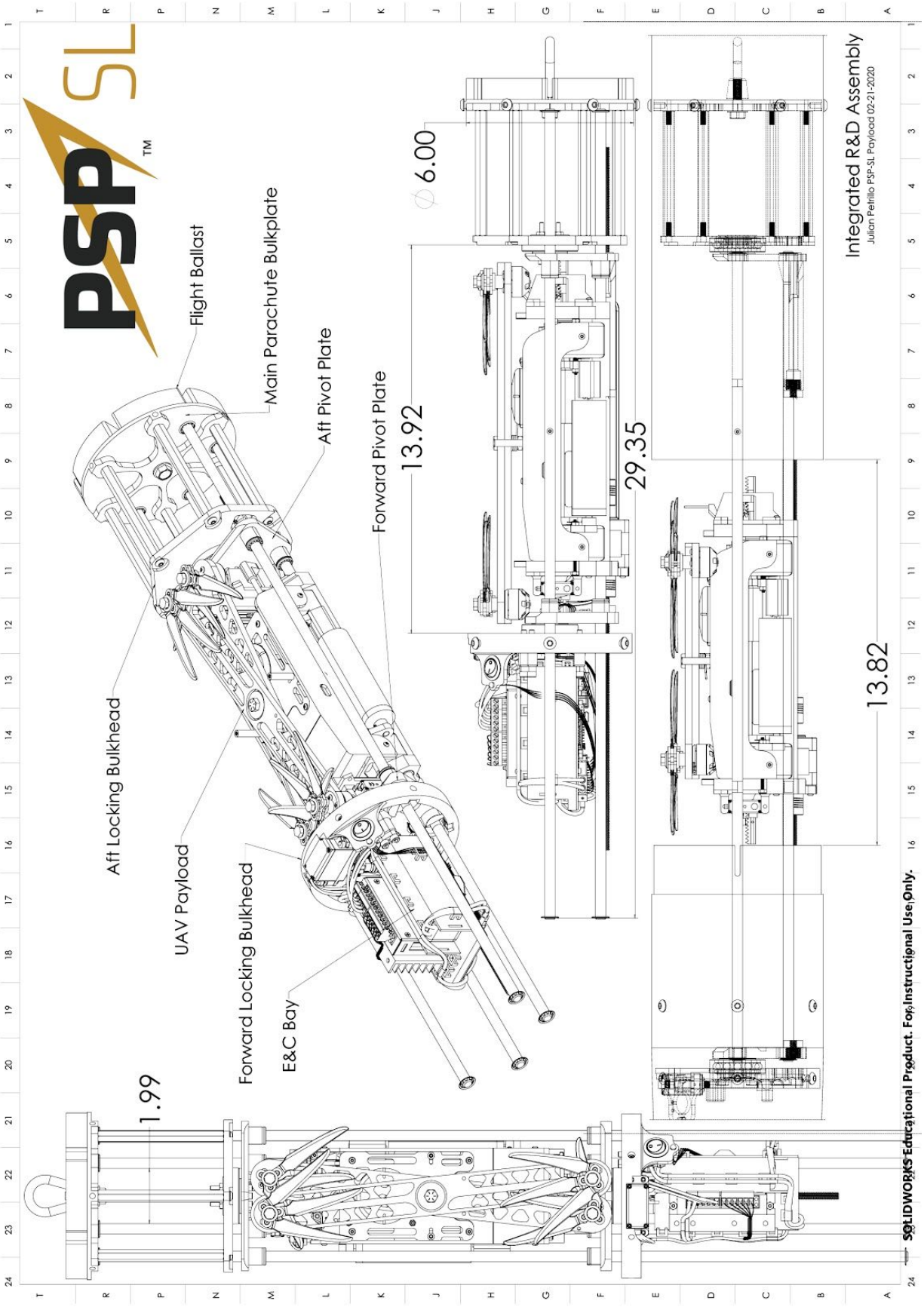
Integrated R&D Assembly
Julian Petrillo PSP-SL Payload 02-21-2020
Flight Ballast
Main Parachute Bulkplate
Aft Pivot Plate
Forward Pivot Plate
Aft Locking Bulkhead
UAV Payload
Forward Locking Bulkhead
E&C Bay
∅ 6.00
13.92
29.35
13.82
1.99
SOLIDWORKS Educational Product. For Instructional Use Only.

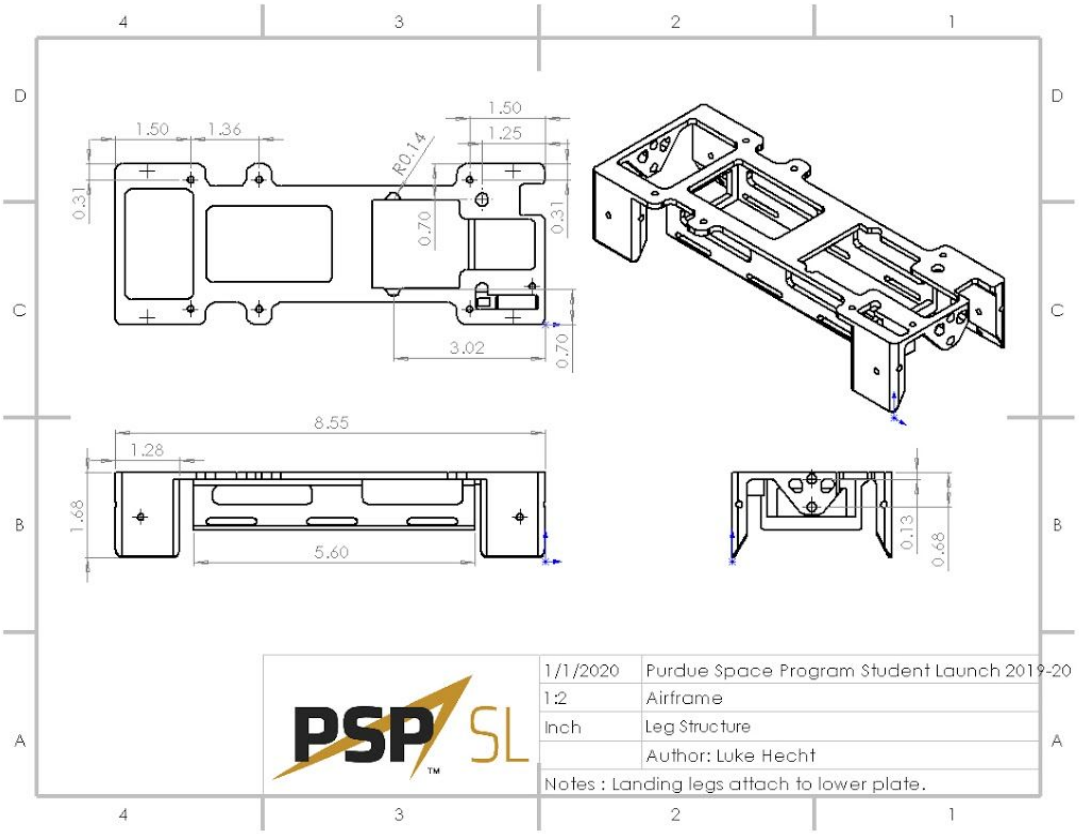
1.50
1.36
R0.14
1.50
1.25
0.31
0.70
0.31
3.02
0.70
8.55
1.28
1.68
5.60
0.13
0.68
1/1/2020
Purdue Space Program Student Launch 2019-20
1:2
Airframe
Inch
Leg Structure
Author: Luke Hecht
Notes : Landing legs attach to lower plate.

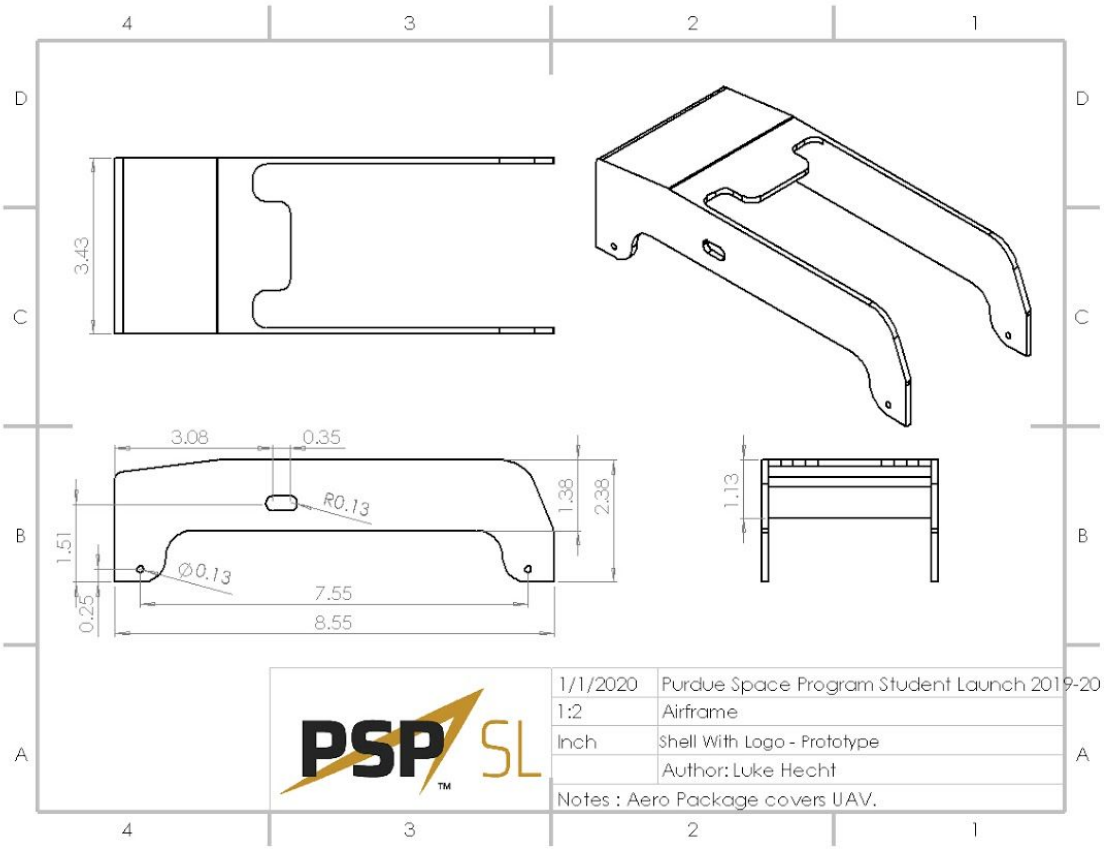
3.43
3.08
0.35
R0.13
1.38
2.38
1.51
Ø0.13
0.25
7.55
8.55
1.13
1/1/2020
Purdue Space Program Student Launch 2019-20
1:2
Airframe
Inch
Shell With Logo - Prototype
Author: Luke Hecht
Notes : Aero Package covers UAV.

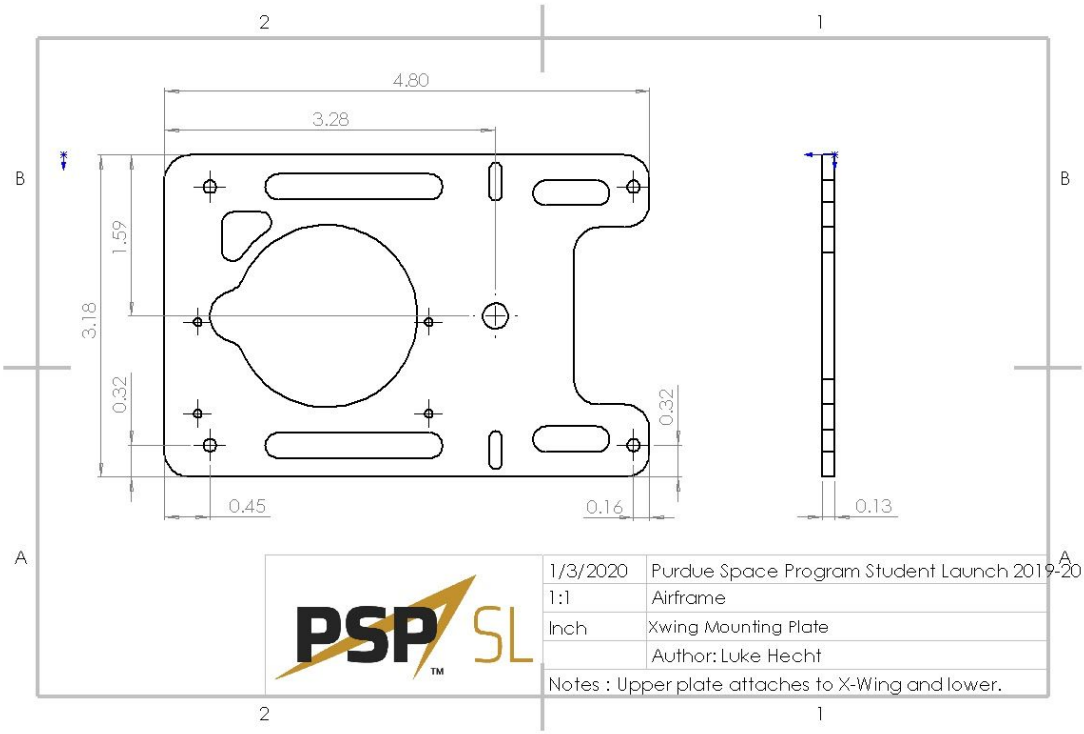
4.80
3.28
1.59
3.18
0.32
0.32
0.45
0.16
0.13
1/3/2020
Purdue Space Program Student Launch 2019-20
1:1
Airframe
Inch
Xwing Mounting Plate
Author: Luke Hecht
Notes : Upper plate attaches to X-Wing and lower.

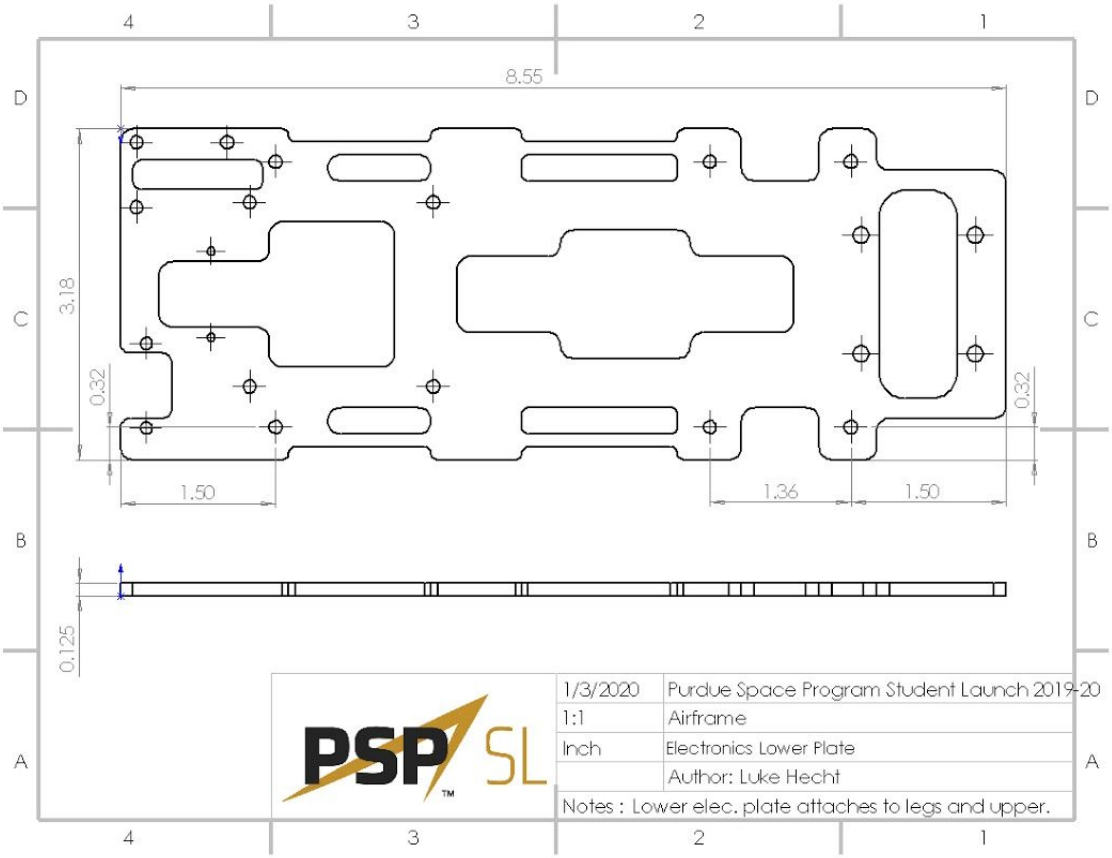
8.55
3.18
0.32
0.32
1.50
1.36
1.50
0.125
1/3/2020
Purdue Space Program Student Launch 2019-20
1:1
Airframe
Inch
Electronics Lower Plate
Author: Luke Hecht
Notes : Lower elec. plate attaches to legs and upper.

2. Appendix B

2.1. NAR High Power Rocket Safety Code

- Certification. I will only fly high power rockets or possess high power rocket motors that are within the scope of my user certification and required licensing.
- Materials. I will use only lightweight materials such as paper, wood, rubber, plastic, fiberglass, or when necessary ductile metal, for the construction of my rocket.
- Motors. I will use only certified, commercially made rocket motors, and will not tamper with these motors or use them for any purposes except those recommended by the manufacturer. I will not allow smoking, open flames, nor heat sources within 25' of these motors.
- Ignition System. I will launch my rockets with an electrical launch system, and with electrical motor igniters that are installed in the motor only after my rocket is at the launch pad or in a designated prepping area. My launch system will have a safety interlock that is in series with the launch switch that is not installed until my rocket is ready for launch, and will use a launch switch that returns to the "off" position when released. The function of onboard energetics and firing circuits will be inhibited except when my rocket is in the launching position.
- Misfires. If my rocket does not launch when I press the button of my electrical launch system, I will remove the launcher's safety interlock or disconnect its battery, and will wait 60 seconds after the last launch attempt before allowing anyone to approach the rocket.
- Launch Safety. I will use a 5-second countdown before launch. I will ensure that a means is available to warn participants and spectators in the event of a problem. I will ensure that no person is closer to the launch pad than allowed by the accompanying Minimum Distance Table. When arming onboard energetics and firing circuits I will ensure that no person is at the pad except safety personnel and those required for arming and disarming operations. I will check the stability of my rocket before flight and will not fly it if it cannot be determined to be stable. When conducting a simultaneous launch of more than one high power rocket I will observe the additional requirements of NFPA 1127.
- Launcher. I will launch my rocket from a stable device that provides rigid guidance until the rocket has attained a speed that ensures a stable flight, and that is pointed to within 20° of vertical. If the wind speed exceeds 5 miles per hour I will use a launcher length that permits the rocket to attain a safe velocity before separation from the launcher. I will use a blast deflector to prevent the motor's exhaust from hitting the ground. I will ensure that dry grass is cleared around each launch pad in accordance with the accompanying Minimum Distance table, and will increase this distance by a factor of 1.5 and clear that area of all combustible material if the rocket motor being launched uses titanium sponge in the propellant.
- Size. My rocket will not contain any combination of motors that total more than 40,960 N-sec (9208 pound-seconds) of total impulse. My rocket will not weigh more at liftoff than one-third of the certified average thrust of the high power rocket motor(s) intended to be ignited at launch.

- Flight Safety. I will not launch my rocket at targets, into clouds, near airplanes, nor on trajectories that take it directly over the heads of spectators or beyond the boundaries of the launch site, and will not put any flammable or explosive payload in my rocket. I will not launch my rockets if wind speeds exceed 20 miles per hour. I will comply with Federal Aviation Administration airspace regulations when flying, and will ensure that my rocket will not exceed any applicable altitude limit in effect at that launch site.
- Launch Site. I will launch my rocket outdoors, in an open area where trees, power lines, occupied buildings, and persons not involved in the launch do not present a hazard, and that is at least as large on its smallest dimension as one-half of the maximum altitude to which rockets are allowed to be flown at that site or 1500', whichever is greater, or 1000' for rockets with a combined total impulse of less than 160 N-sec, a total liftoff weight of less than 1500 grams, and a maximum expected altitude of less than 610 meters (2000').
- Launcher Location. My launcher will be 1500' from any occupied building or from any public highway on which traffic flow exceeds 10 vehicles per hour, not including traffic flow related to the launch. It will also be no closer than the appropriate Minimum Personnel Distance from the accompanying table from any boundary of the launch site.
- Recovery System. I will use a recovery system such as a parachute in my rocket so that all parts of my rocket return safely and undamaged and can be flown again, and I will use only flame-resistant or fireproof recovery system wadding in my rocket.
- Recovery Safety. I will not attempt to recover my rocket from power lines, tall trees, or other dangerous places, fly it under conditions where it is likely to recover in spectator areas or outside the launch site, nor attempt to catch it as it approaches the ground.

2.2. NAR Minimum Distance Table

Installed Total Impulse (Newton-Seconds)	Equivalent High Power Motor Type	Minimum Diameter of Cleared Area (ft.)	Minimum Personnel Distance (ft.)	Minimum Personnel Distance (Complex Rocket) (ft.)
0 — 320.00	H or smaller	50	100	200
320.01 — 640.00	I	50	100	200
640.01 — 1,280.00	J	50	100	200
1,280.01 — 2,560.00	K	75	200	300
2,560.01 — 5,120.00	L	100	300	500
5,120.01 — 10,240.00	M	125	500	1000
10,240.01 — 20,480.00	N	125	1000	1500
20,480.01 — 40,960.00	O	125	1500	2000

Note: A Complex rocket is one that is multi-staged or that is propelled by two or more rocket motors

3. Appendix C

3.1. Pre-Launch Packing Lists

Items to be packed before leaving for launch site

Rocket body components

- ❏ Nose cone
- ❏ Upper airframe
- ❏ Lower airframe
- ❏ Avionics sled
- ❏ Payload retention system
- ❏ Rocket Motors
- ❏ Rocket Motor tubes

Payload

- ❏ General
  - ❏ Laptop with payload software suite
  - ❏ Laptop chargers
  - ❏ Multimeter
  - ❏ Jumper wires
  - ❏ Electronic tweezers
  - ❏ Wire strippers
  - ❏ Soldering iron
  - ❏ Solder
  - ❏ Solder wick
  - ❏ Solder helping hands
  - ❏ Stranded core wire
  - ❏ Solid core wire
  - ❏ LiPo charger
  - ❏ Phillips screwdriver
  - ❏ Small flathead screwdriver
  - ❏ Breadboard
  - ❏ Heat shrink kit
  - ❏ Electrical tape
  - ❏ Resistor kit
  - ❏ IC kit (diodes, transistors, etc.)
  - ❏ GCS Assembly
  - ❏ GCS batteries
  - ❏ GCS power adapter
  - ❏ Spare GCS buttons
  - ❏ Spare "missile" switches
  - ❏ Spare LCD display
  - ❏ Handheld GPS locator
  - ❏ 9V batteries
  - ❏ Pliers
  - ❏ Allen Key Set
  - ❏ RC Transmitter
  - ❏ RC Transmitter Battery
  - ❏ FAA Registration
  - ❏ Spare 32GB FAT32 SD Cards
  - ❏ Spare Propellers CW/CCW
  - ❏ Spare Propeller Hubs
  - ❏ Zipties
  - ❏ Double Sided Foam Tape
  - ❏ JST XH Connecters
  - ❏ Wire Crimper
  - ❏ Micro USB Cables
  - ❏ Loctite
  - ❏ Nuts/Bolts M3, 4-40
- ❏ UAV
  - ❏ UAV leg assembly
  - ❏ UAV electronics stack assembly
  - ❏ UAV X-Wing assembly
  - ❏ Airframe shell
  - ❏ Battery housing
  - ❏ Propellers
  - ❏ Propeller locking nuts
  - ❏ Brushless DC motors
  - ❏ Ice mining assembly
  - ❏ Ice mining DC motor
  - ❏ Pixhawk 4
  - ❏ Pixhawk PDU
  - ❏ Raspberry Pi Zero
  - ❏ Raspberry Pi camera
  - ❏ Raspi camera ribbon cable
  - ❏ LiDAR unit
  - ❏ GPS module
  - ❏ 915 MHz radio
  - ❏ Pixhawk wire kit
  - ❏ ESC
  - ❏ Spare bullet connectors

- ❏ LiPo battery
- ❏ Taranis Q X7
- ❏ Retention
  - ❏ Upper airframe
  - ❏ Nosecone
  - ❏ Half Coupler w/ slot
  - ❏ ¼-20 x ⅝" fasteners
  - ❏ ¼-20 x ⅜" fasteners
  - ❏ 4-40 x ½" fasteners
  - ❏ 4-40 x ⅝"
  - ❏ ¼-20 Nut
  - ❏ 6-32 Nut
  - ❏ 6-32 x ½"
  - ❏ 6-32 x 1⅜"
  - ❏ 4-40 x ¼"
  - ❏ Long-body 4-40 insert nuts
  - ❏ Flat-body ¼-20 press fit nuts
  - ❏ Rotation Lock, L/R
  - ❏ Rocket Stand
  - ❏ Push-on retaining rings
  - ❏ Lead nuts (left and right)
  - ❏ 2" OD ball bearing
  - ❏ Fixed alignment sleeve bearing
  - ❏ Self-aligning sleeve bearing
  - ❏ Notched ⅜" shafts
  - ❏ 3D printed rotary nut plate w/ pass through
- ❏ HSR-2648CR Continuous Servo
- ❏ Actobotics shaft-servo coupler
- ❏ ¼" D shaft
- ❏ Worm gear assembly
- ❏ Rocker switch
- ❏ LED
- ❏ 3D printed nose cone interface bulkplate
- ❏ 3D printed battery housing
- ❏ 2200 mAh LiPo battery
- ❏ 6mm shaft encoder
- ❏ 3D printed bearing clamp collar
- ❏ 3D printed sled-encoder adapter
- ❏ Acrylic stationary retention plate
- ❏ 3D printed rotary nut plate w/o pass through
- ❏ 3D printed nut extender
- ❏ Aluminum bulkplate
- ❏ Long bulkplate standoff
- ❏ Eye nut
- ❏ M8 black-oxide bolt
- ❏ 3D printed bearing clamp plate
- ❏ Stepper motor
- ❏ Stepper motor driver
- ❏ R&D electronics PCB

Construction

- ❏ Drill
- ❏ Drill battery (charged and packed or charging)
- ❏ Drill bits (5/64", 3/16", 1/8")
- ❏ Sandpaper
- ❏ Tape (duct tape and painter's tape)
- ❏ Pliers (needle nose and regular)
- ❏ Screwdrivers (flathead and Phillips)
- ❏ Wrench set
- ❏ Allen key set
- ❏ 5-minute epoxy
- ❏ Acetone
- ❏ Paper towels
- ❏ Shear pins
- ❏ Extra eye bolts
- ❏ Extra nuts/washers
- ❏ Extra motor retainer
- ❏ Extra shock cord
- ❏ Extra rail button
- ❏ Threadlock
- ❏ Rotary tool
- ❏ Charged rotary tool battery

Safety team box

- ❏ Face masks
- ❏ Eye protection
- ❏ Ear protection
- ❏ Nitrile gloves
- ❏ Pocket rocket documents
- ❏ Marking flags
- ❏ First aid kit

Team toolbox

Avionics

- ❏ Assembled avionics bay
- ❏ Coupler

- ❏ Switch band
- ❏ (3) switch holders
- ❏ (3) rocker switches
- ❏ Camera mount
- ❏ Camera
- ❏ (6) 440 shear pins
- ❏ (2) bulkheads
  - ❏ (4) terminal blocks
  - ❏ (4) charge wells
  - ❏ (2) I-bolts
  - ❏ (8) 440 screws
  - ❏ (8) 440 hex nuts
  - ❏ (2) ¼-20 hex nuts
  - ❏ (2) ¼" washers
- ❏ (2) threaded rods
- ❏ (16) ¼-20 hex nuts
- ❏ (4) ¼" washers
- ❏ Avionics sled assembly
  - ❏ Altimeter sled 3D printed part
  - ❏ Battery guard 3D printed part
  - ❏ Telemetrum altimeter
  - ❏ RRC3+ Sport altimeter
  - ❏ 900 mAh 3.7V LiPo battery
  - ❏ 9V alkaline battery
  - ❏ 9V battery connector
  - ❏ (8) altimeter mounting posts
  - ❏ (8) 440 nylon screws
- ❏ (6) switch wires
- ❏ (4) lighters
- ❏ (4) nitrile glove fingers
- ❏ 30g black powder
- ❏ Dog barf
- ❏ Aluminum foil
- ❏ Tape (masking or duck)

❏ (2) ¼" SS quick links
❏ 20' long, ½" tubular nylon shock cord
❏ 40' long, ½" tubular nylon shock cord
❏ Fruity Chutes Classic Elliptical drogue parachute
❏ Skyangle Cert-3 XXL main parachute
❏ (2) Nomex blankets
❏ Epoxy
❏ 9V batteries
❏ 9V battery connectors
❏ 900 mAh LiPo batteries
❏ Altimeter mounting posts/screws
❏ Telemetrum terminal blocks
❏ Switches
❏ 28 gauge red wire
❏ 28 gauge black wire
❏ Terminal blocks
❏ Black powder canisters
❏ ¼-20 hex nuts
❏ ¼" washers
❏ 440 screws
❏ 440 hex nuts
❏ 440 shear pins
❏ Lighters
❏ Long lighters
❏ Nitrile gloves
❏ Black powder
❏ Dog barf
❏ Aluminum foil
❏ Tape (masking or duck)
❏ ¼" SS quick links
❏ Epoxy
❏ Skyangle Cert-3 XL main parachute
❏ Skyangle Cert-3 Drogue drogue parachute
❏ TeleDongle
❏ Yagi 3 Arrow Antenna
❏ SMA to BNC adapter
❏ Screwdriver set
❏ Hex wrench set
❏ Masking tape
❏ Duck tape
❏ Scissors
❏ Soldering iron
❏ Soldering material
❏ RRC3+ Sport manual**** (critical)
❏ Telemetrum manual**** (critical)
❏ Micro USB → USB cable (for Telemetrum)
❏ 5-pin joiner → USB interface (for RRC3+ Sport)
❏ Mini USB → USB cable (for RRC3+ Sport)
❏ Laptop with AltOS (for Telemetrum) and mDACS (for RRC3+ Sport) installed